DJB Instruments
PRECISION IS OUR BUSINESS

A600/T Micro g piezo-electric accelerometer

1.2 nC/g nom. 110gm wt. 250.C max. temp

Ultra high output, multiple shear plate vibration transducer. Shear plate construction provides near total isolation from mechanical inputs other than acceleration, thus safe guarding measurement integrity in applications where vibration is accompanied by high dynamic strain levels.
Generalizing, these conditions are prevalent where modal frequencies are low, and are thus associated with vibration surveys of large structures. Transducers exhibiting significant strain response may operate more skin to strain gauges at low frequency excitation and their use is to be discouraged.
A number of parallel shear plates equivalent in total thickness to single plate of charge sensitivity Q and capacitance C, generates charge nQ. Clearly taken to the limit, noise degradation overrides signal increase, hence these products are largely a compromise between signal/noise and mass/size.

A/600 A/600/T A/600/TC

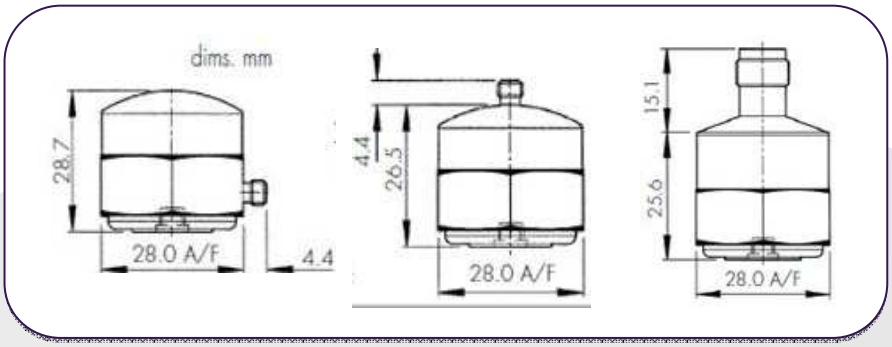

Typical Frequency Response

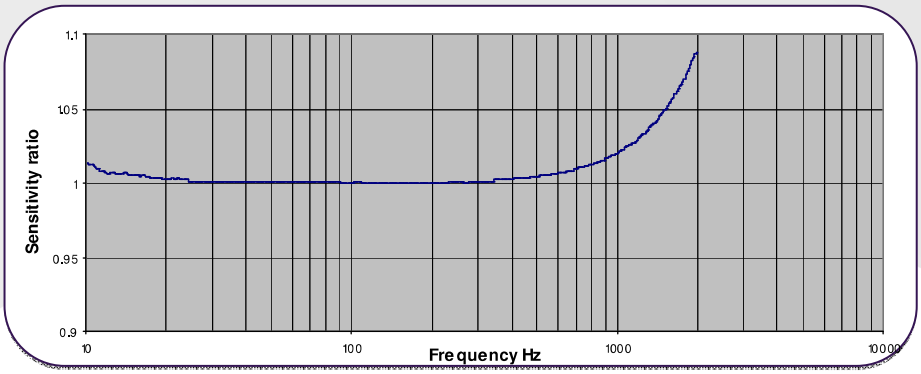

Conversion Mode	Konic
charge sensitivity pC/g	0.9/1.4
Capacitance pF	6/9
Resonant frequency kHz	8
cross axis error % max	5
temperature range .C	-50/+250
charge sensitivity deviation re 20.C	-5% @ -50.C +15% @ +250.C
pyro-electric output, g/.C	0.2
pyro-electric corner frequency Hz	0.001
base strain sens/ strain	10/-4
max continuous accn. G sine	700
case material	s/steel 303 S31
mounting	Base tapped 10/32 UNF x 4mm deep
weight gm	110
connector	Microdot skt. 10/32
Case seal	welded

Temperature Response

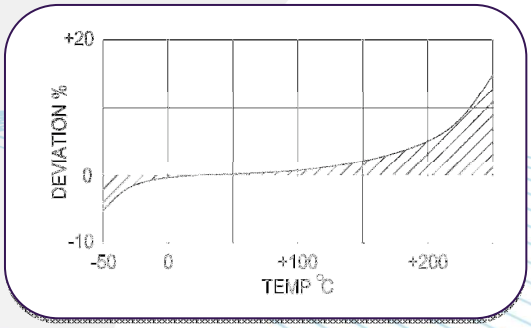

Options

- Wideband temperature calibration -50/+250.C

CMV Steck GmbH
Rheinstraße 92 D-76870 Kandel
Tel: + 49 (0) 7275 988 684 - 0 Fax: + 49 (0) 7275 988 684 - 9
www.CMV-Steck.de e-mail: info@CMV-Steck.de

ISO 9001:2008